varaMORA

ASSEMBLY MANUAL

Ottoman w/Tray

PATIOVA varaMORA

Getting Started

OTTOMAN PARTS

Top Frame Assembly (1)

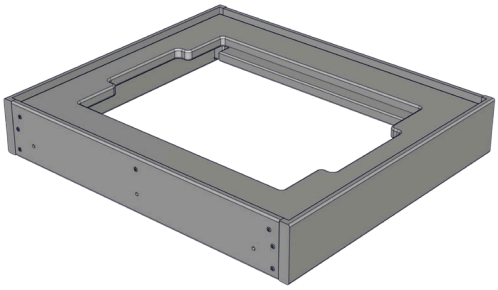

Tray Assembly (1)

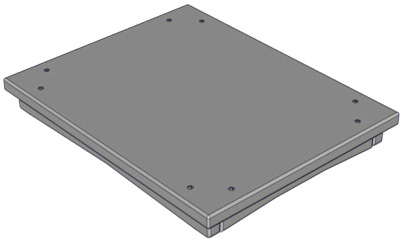

Side Pieces (2)

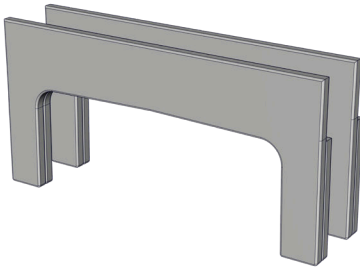

INCLUDED HARDWARE:

OTTOMAN HARDWARE PACK

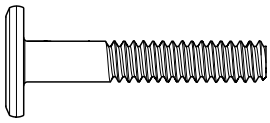

1 1/4" Bolts (6)

4mm Hex Key (1)

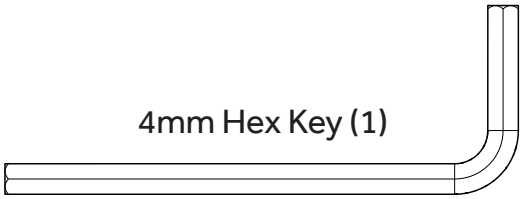

STEP 1

Begin the assembly by placing the top frame assembly face down on a clean and flat surface.

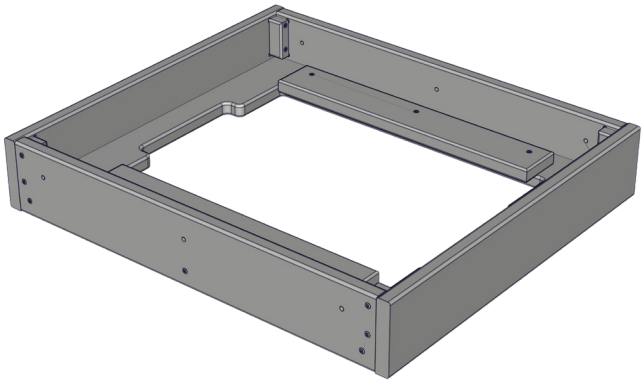

STEP 2

Place the two side pieces on either side of the top frame assembly. The insert nuts on the side pieces need to face IN to align with the holes on the frame.

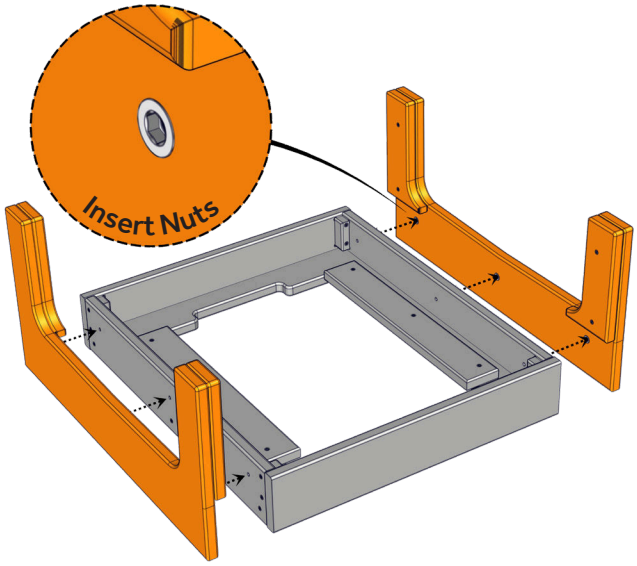

STEP 3

Fasten the side pieces to the top frame assembly using six (6) 1 ¼" bolts through the pre-drilled holes.

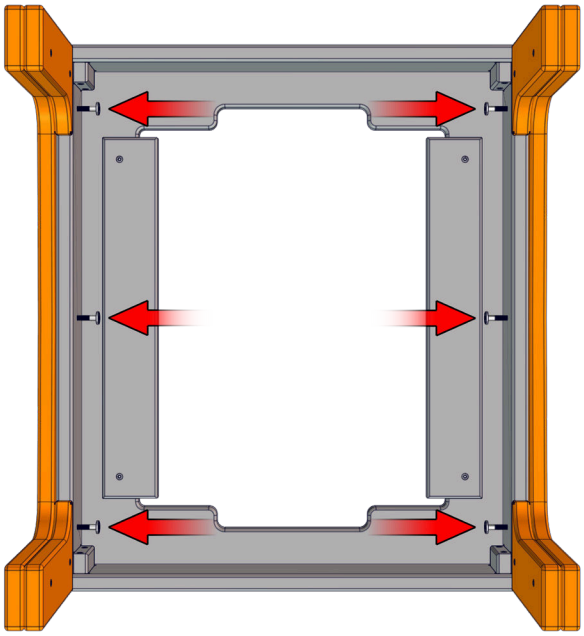

STEP 4

Check all the bolts to ensure
Set the Ottoman upright and place the tray assembly in position.

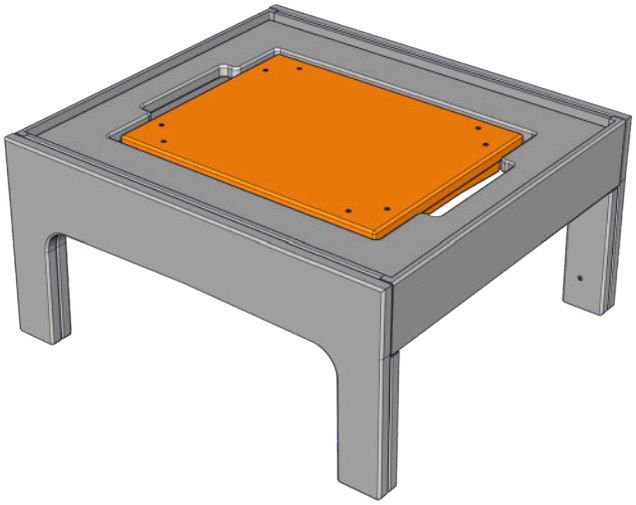

Place the Ottoman cushion on top and enjoy!

The ottoman tray can be removed from the base and placed on top of the ottoman cushion for serving or decorative purposes.

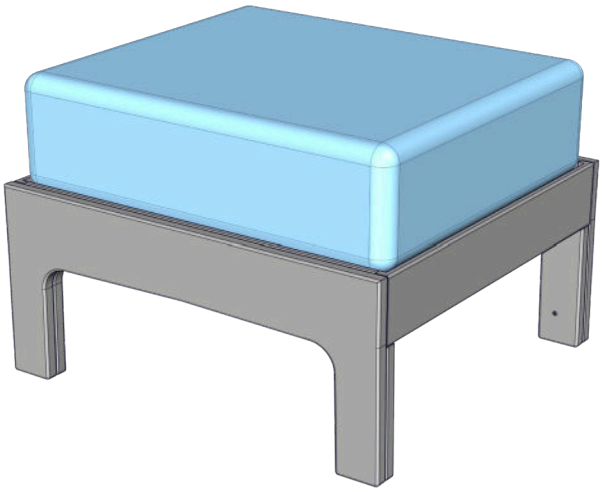

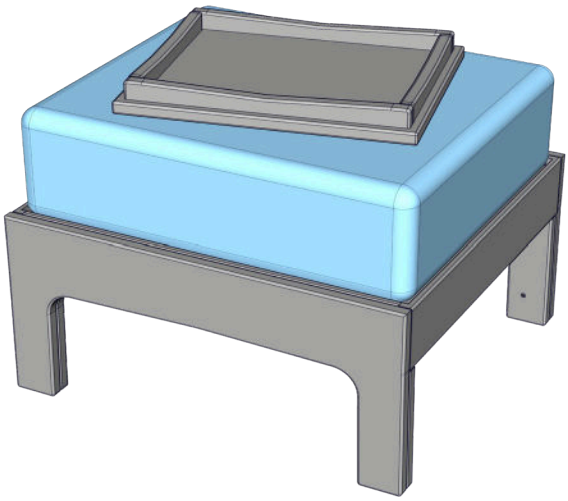

Care & Maintenance

POLY MATERIAL

General Cleaning

Scrub boards with soap and water solution using a soft sponge or plastic bristled brush. You can use a soft bristled toothbrush to clean spaces that are hard to reach. To remove surface dust, hose furniture down with cold, clear water.

Deep Cleaning

A pressure washer can be used on the lightest setting to deep clean your furniture. It is not recommended to use more than 1,500 psi. Keep the tip of the pressure washer at least 10-12 inches from the furniture so it doesn't damage the material.

For a list of specific stain removal, visit TangentMaterials.com.

CUSHIONS & PILLOWS

General Cleaning

Remove any loose dirt. Prepare a mixture of cold to lukewarm water (do not exceed 100° F) and mild soap. Rub in mixture with a soft brush and allow the mixture to thoroughly soak into the fabric. Rinse well with water and air dry. Do not machine dry.

Stubborn Stains

Remove as much surface dirt as possible. Soak fabric for 1 hour in a mixture of 1 gallon cold water, 1/2 cup bleach, and 1/2 cup mild soap.

Rub in mixture with a soft brush and rinse thoroughly with cold to lukewarm water and air-dry. Never use water over 100 degrees Fahrenheit. Do not machine dry. Detergents can be used on Outdura without harm; however, it may remove some of the water and stain resistant properties.

For more information, visit outdura.sattler.com.

Contact Us

Questions about assembly or missing parts? Please contact the retailer you purchased from.